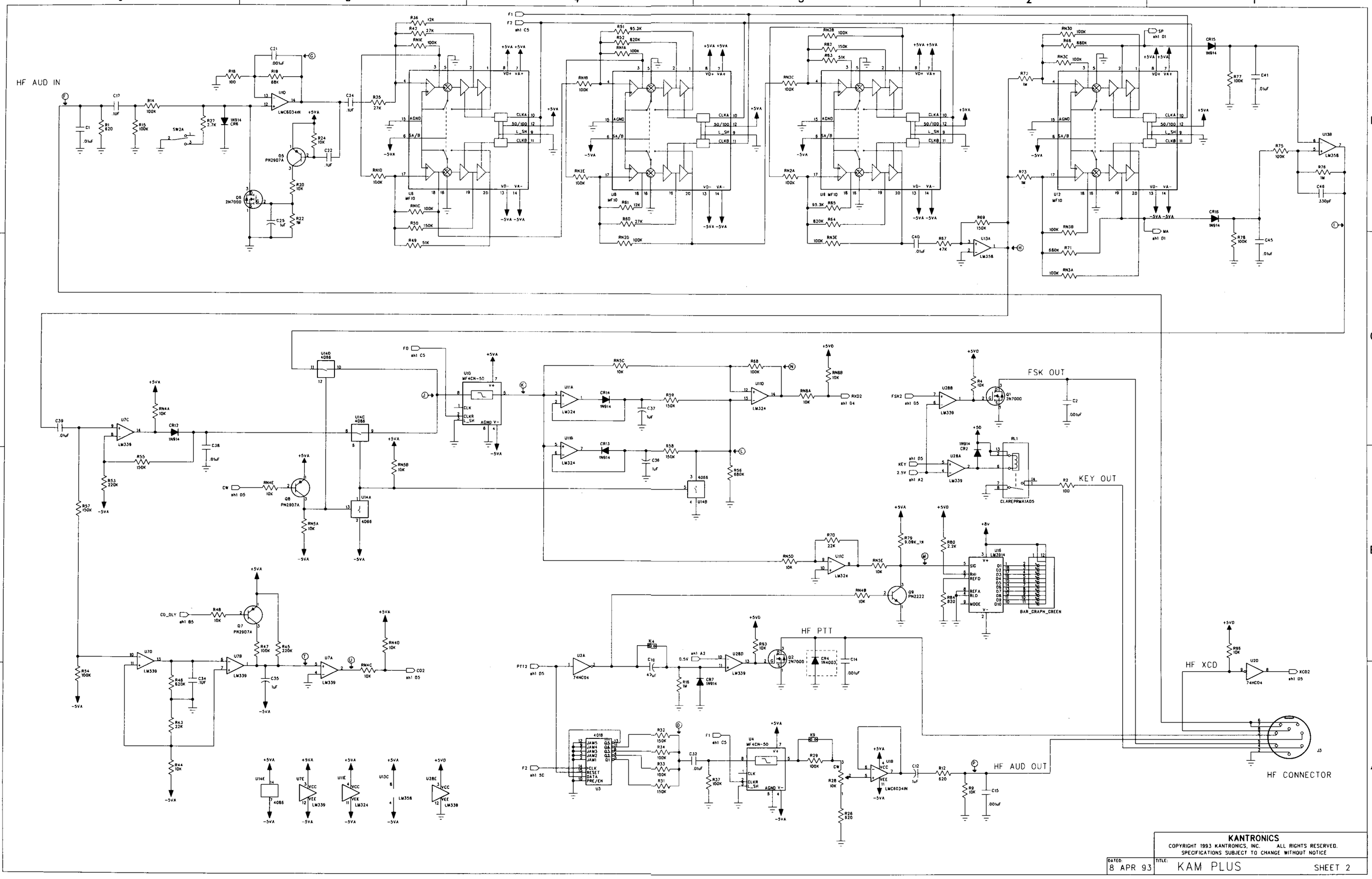

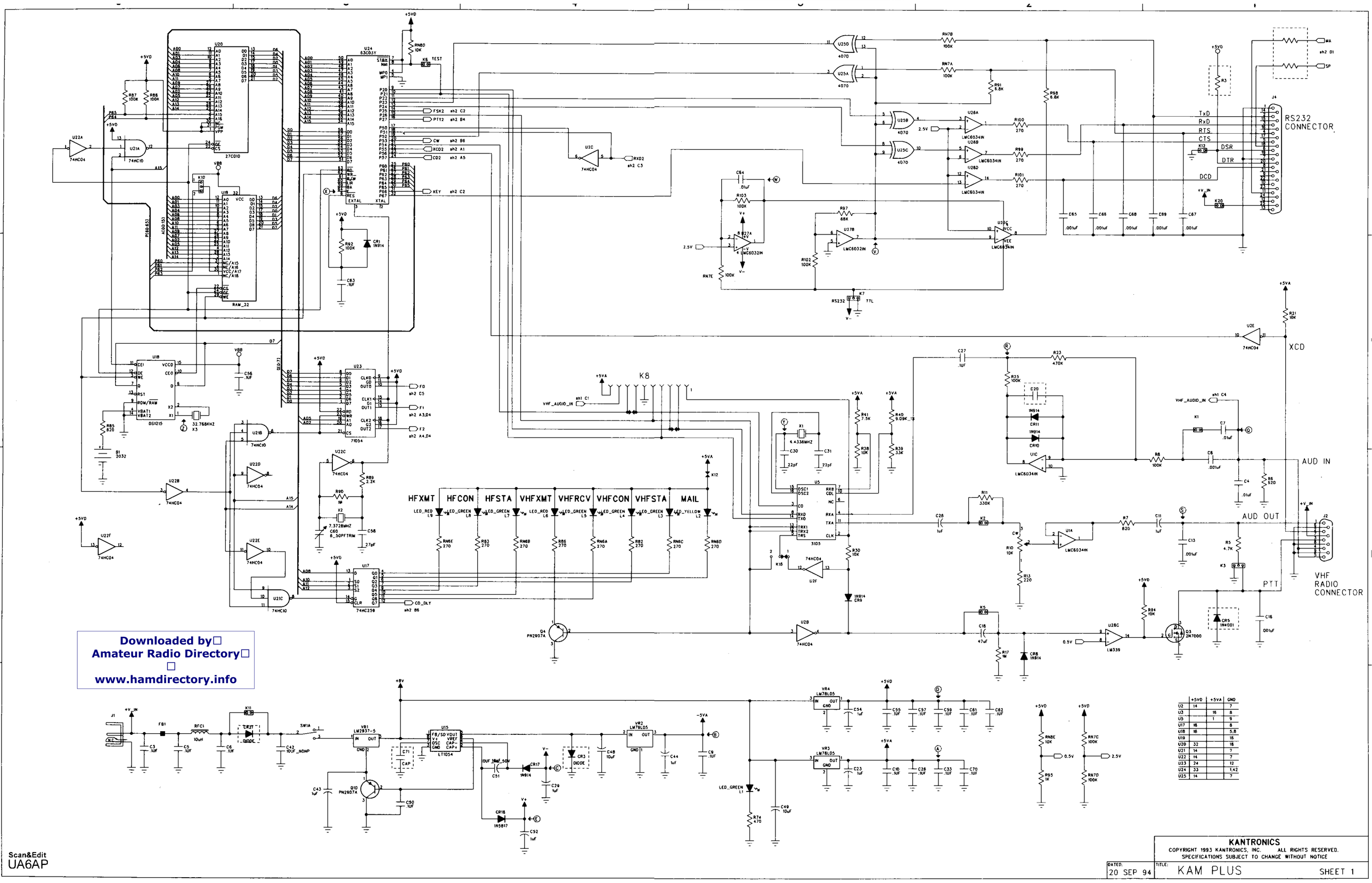

Downloaded by
Amateur Radio Directory
www.hamdirectory.info

Scan&Edit
UA6AP